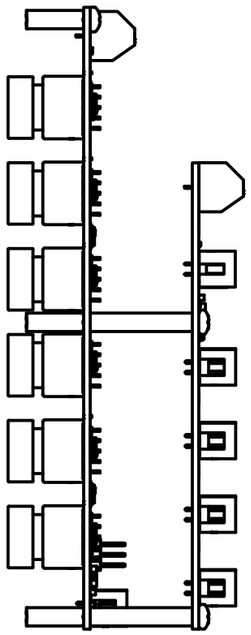

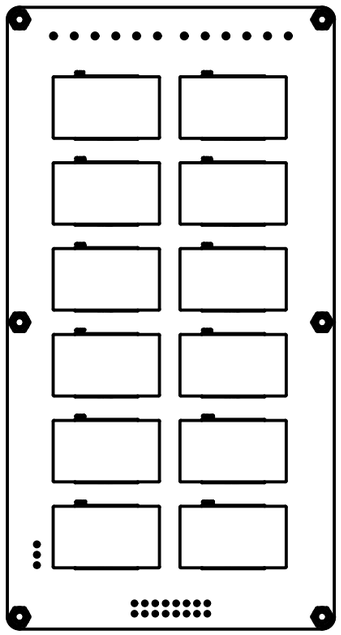

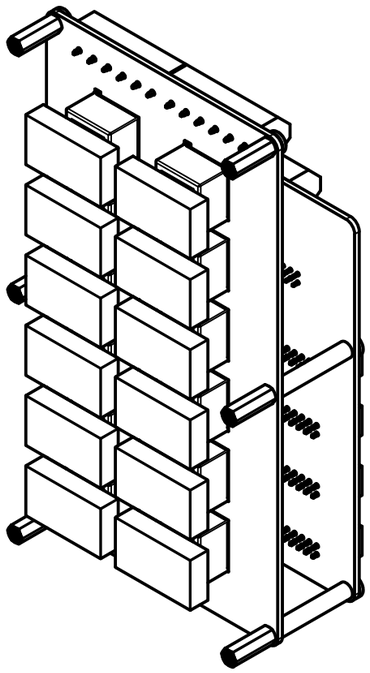

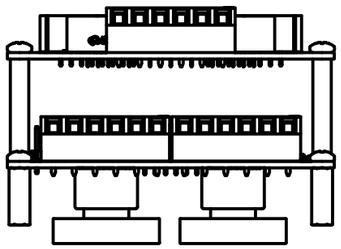

Dept.	Technical reference	Created by	Approved by
	Scale 2:3	J. Rostoker 6/14/2026	J. Kerman 6/14/2026
JEB'S CONTROLLER WORKS		Document type: CCA Assembly Drawing	Document status: RELEASED
		Title: Button Module Wide Complete Kerbal Controller Mk1	DWG No.: KC-01-1810
			Rev.: A · Date of issue: 6/14/2026 · Sheet: 1/2

Parts List

Item	Qty	Part Number	Part Name	Description
1	1	01-1812	Button Module Wide	Custom PWB; Mfr: JLCPCB
2	12	PB26-13M-E-RGB	PB26-13M-E-RGB	PB26-13M Rectangular 26*15mm With LED SPDT Momentary Self-Return PCB Push Button Switch; RGB LED; Mfr: Honyone
3	6	91920A557	Standoff - M3 - 14mm x 4.5mm	Female Threaded Hex Standoff, 12L14 Steel, 4.5 mm Hex, 14 mm Long, M3 x 0.5 mm Thread
4	4	93657A225	Spacer - M3 - 25mm x 4.5mm	Nylon Unthreaded Spacer, 4.5 mm OD, Off-White, 25 mm Long, for M3 Screw
5	1	01-1732	Panel Hub	Custom PWB; Mfr: JLCPCB
6	2	92000A118	Screw - M3 - 8mm	Passivated 18-8 Stainless Steel Pan Head Phillips Screws, M3 x 0.5mm Thread, 8mm Long
7	4	92000A134	Screw - M3 - 35mm	Passivated 18-8 Stainless Steel Pan Head Phillips Screws, M3 x 0.5mm Thread, 35mm Long

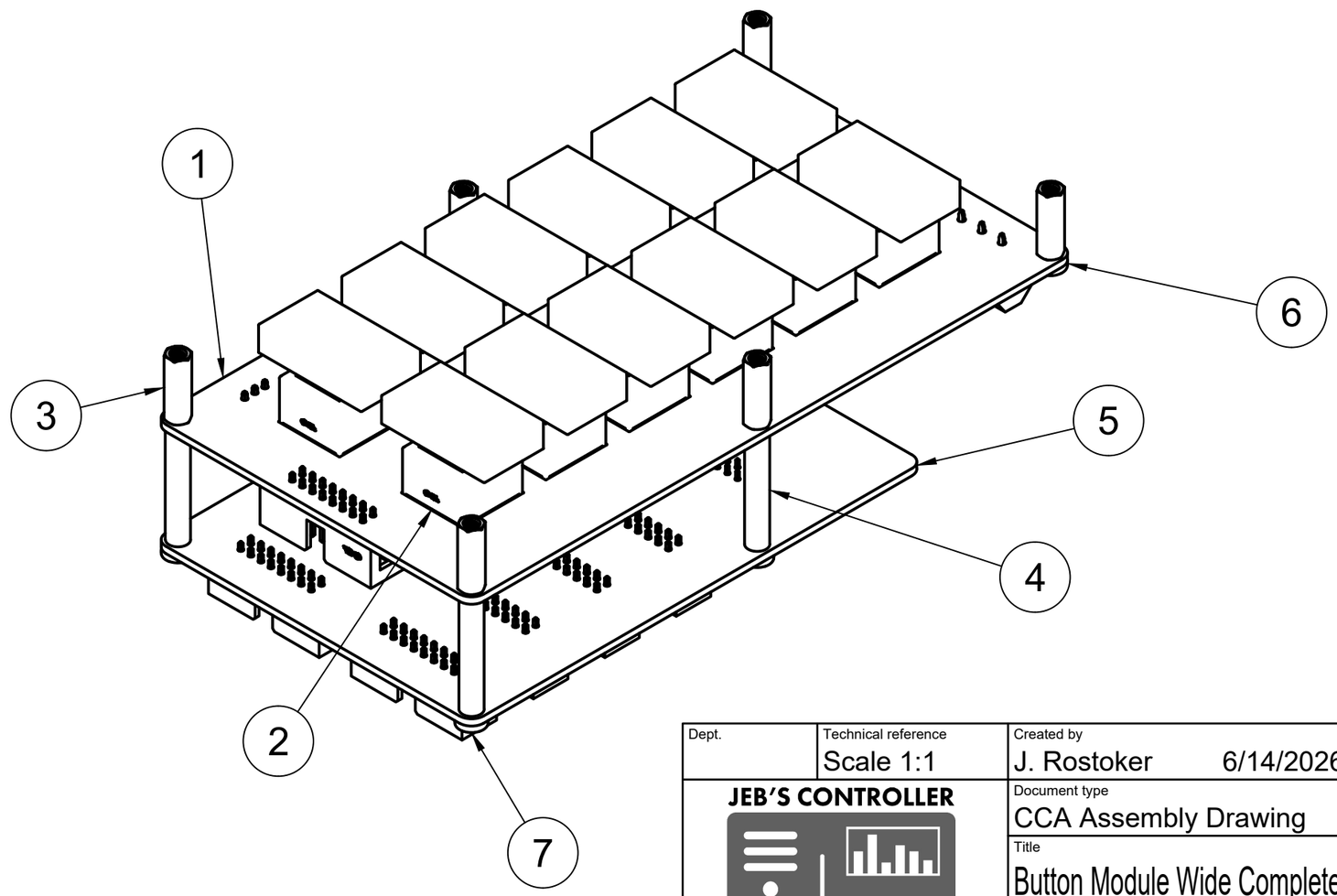

Part List

Dept.	Technical reference	Created by	Approved by
	Scale 1:1	J. Rostoker 6/14/2026	J. Kerman 6/14/2026
JEB'S CONTROLLER WORKS	Document type: CCA Assembly Drawing		Document status: RELEASED
	Title: Button Module Wide Complete Kerbal Controller Mk1		DWG No. KC-01-1810
			Rev. A / Date of issue 6/14/2026 / Sheet 2/2